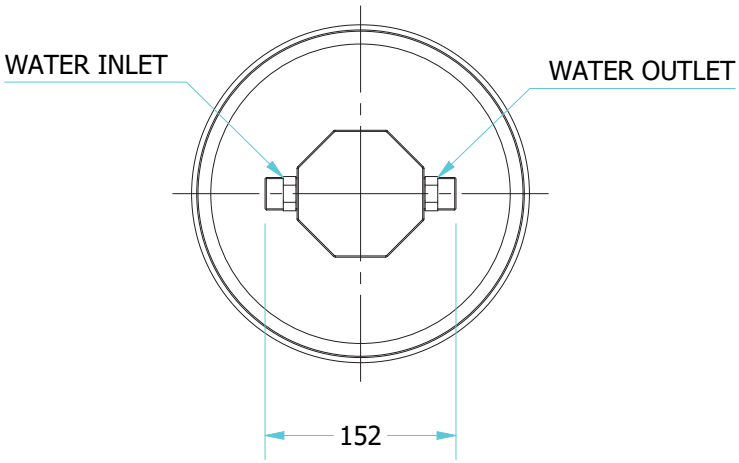

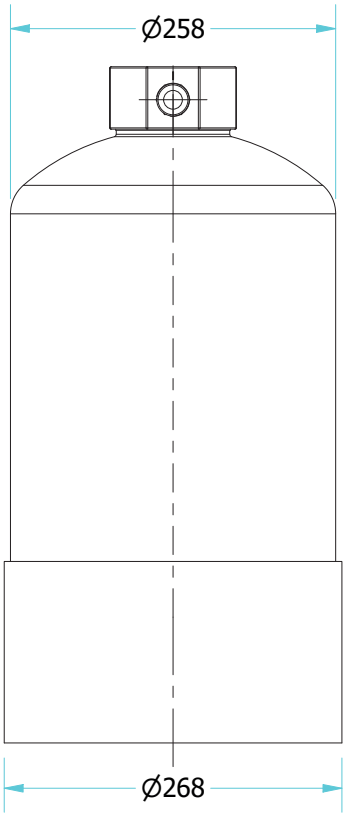

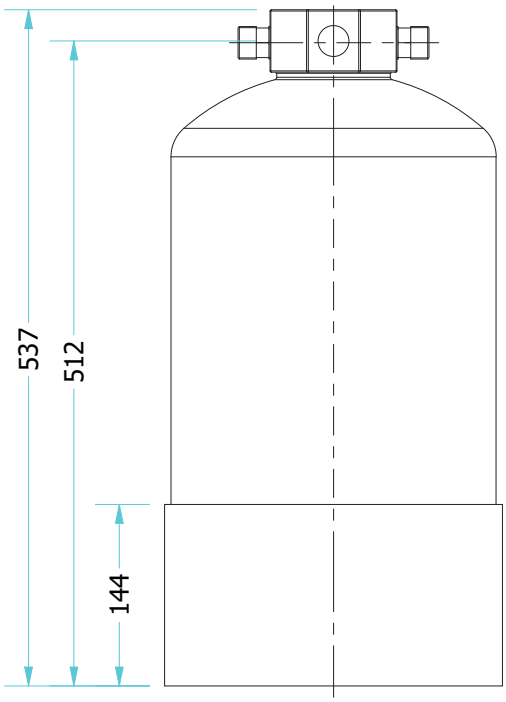

INSTALLATION REQUIREMENTS	
MINIMUM WATER PRESSURE	1.5 BAR
MAXIMUM WATER PRESSURE	6.0 BAR
MINIMUM WATER TEMPERATURE	PROTECT FROM FREEZING
MAXIMUM WATER TEMPERATURE	35 deg celsius
CONNECTIONS	3/4" INLET AND OUTLET - OTHER OPTIONS AVAILIABLE UPON REQUEST
CAPACITY (litres)	15355

WATERCARE

EUROPEAN WATERCARE LTD
REGAL HOUSE, SOUTH ROAD
HARLOW, CM20 2BL
ESSEX, ENGLAND
TEL: +44 (0) 1279 780 250

EUROPEAN WATERCARE LTD
This drawing and its contents are the exclusive property of European Watercare ltd and may not be used, copied or disclosed to any third party without the express written permission of European Watercare ltd. It must be returned immediately upon request.

APPR. BY:	
APPR. DATE:	
SCALE:	NTS
JOB No:	017
DRAWN BY:	JS
DATE:	18/01/2020
SHEET SIZE:	A4
REV.	

THIRD ANGLE PROJECTION

TITLE:
DETAIL OF PRIMA - 18 CTU
HEAD: 2 - PORT HEAD
VESSEL COLOUR: BLUE

SHEET NUMBER:	1 OF 1
DRAWING No.	PRIMA - 18